BLSL3060 Manual_Layout 1 4/16/2015 5:44 PM Page 1

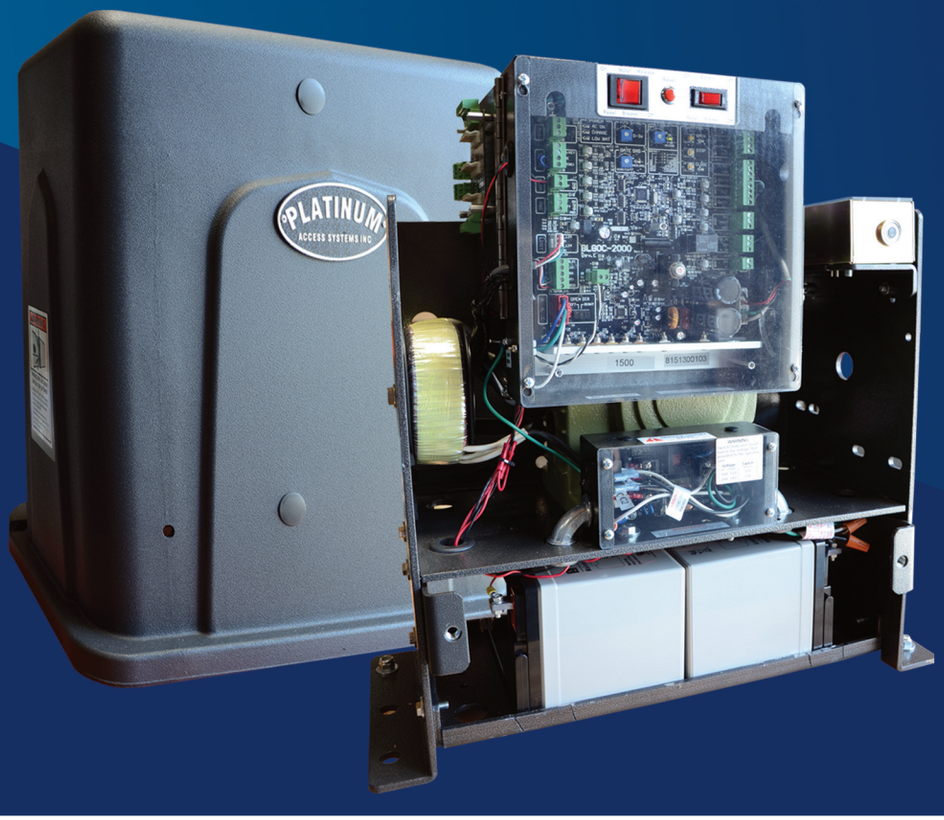

BLSL3060

Vehicular Gate Operator

Installation Instruction & Owner's Manual

INTERTEK ETL LISTED US
UL 325 UL 991

PLATINUM ACCESS SYSTEMS, INC.

PLATINUM ACCESS SYSTEMS™

BLSL3060 Manual_Layout 1 4/16/2015 5:44 PM Page 3

BLSL3060
Vehicular Gate Operator
Class I, Class II, Class III, and Class IV

TA BLE OF CONTENTS

Gate Operator Class Categories & Example 2
Protection Against Entrapment 3
Use & Application 4
Important Safety Instructions 5
Maintenance Instructions 6
Intended Use 7
Types of Installations 8-9
Mounting Instructions 10-12
- Entrapment Protection 13
- Inductive Loops 14-15
- Alarm Reset Switch 16
- Warning Placards
- Electrical 17-18
- Limit Switches 19-20
- Primary/Secondary Connections 21
- Loop Rack 22
- Accessory Connections 23-26
- Selectable Features 27-28
- Solar Installation 29

Parts Diagram 30
Gate Operator Trouble Shooting Procedure 31-32

Gate operator class categories and examples

READ AND FOLLOW ALL INSTRUCTIONS MANUAL BEFORE ATTEMPTING ANY INSTALLATION

Residential Vehicular Gate Operator Class I

A vehicular gate operator (or system) intended for use in a home of one-to four single family dwelling, or a garage or parking area associated therewith.

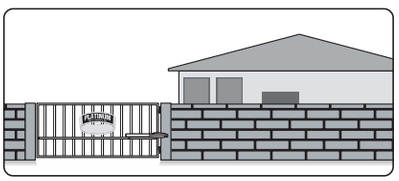

Commercial/General Access Vehicular Gate Operator Class II

A vehicular gate operator (or system) intended for use in a commercial location or building such as a multi-family housing unit (five or more single family units), hotel, garages, retail store, or other building servicing the general public.

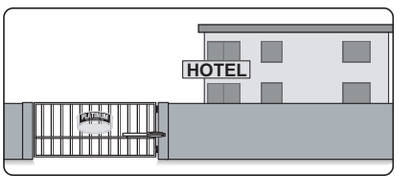

Industrial/Limited Access Vehicular Gate Operator Class III

A vehicular gate operator (or system) intended for use in an industrial location or building such as a factory or loading dock area or other locations not intended to service the general public.

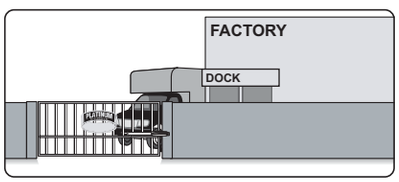

Restricted Access Vehicular Gate Operator Class IV

A vehicular gate operator (or system) intended for use in a guarded industrial location or building such as an airport security area or other restricted access locations not servicing the general public, in which unauthorized access is prevented via supervision by security personnel.

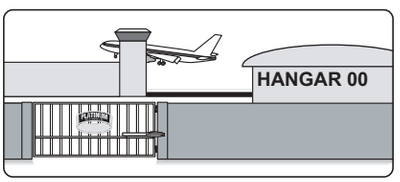

PROTECTION AGAINST ENTRAPMENT

Usage Class	Gate Operator Category			
	Horizontal Slide, Vertical lift, and Vertical Pivot		Swing and Vertical Barrier (arm)	
	Primary Type*	Secondary Type*	Primary Type*	Secondary Type*
Vehicular I and II Vehicular III Vehicular IV	A A, B1, or B2 A, B1, B2, or D	B1, B2, or D A, B1, B2, D, or E A, B1, B2, D, or E	A, or C A, B1, B2, or C A, B1, B2, C, or D	B1, B2, C, or D A, B1, B2, C, D, or E A, B1, B2, C, D, or E

Note - The same type of device shall not be utilized for both the primary and the secondary entrapment protection means. Use of a single device to cover both the opening and closing directions is in accordance with the requirement; however, a single device is not required to cover both directions. A combination of one Type B1 for one direction and one Type B2 for the other direction is the equivalent of one device for the purpose of complying with the requirements of either the primary or secondary entrapment protection areas.

[a] **Entrapment protection Types:**

Type A: Inherent entrapment protection system.

Type B1: Provision for connection of, supplied with, a non-contact sensor (photoelectric sensor or the equivalent).

Type B2: Provision for connection of, or supplied with, a contact sensor (edge device or the equivalent)

Type C: Inherent adjustable clutch or pressure relief device.

Type D: Provision for connection of, or supplied with, an actuating device requiring continuous pressure to maintain opening or closing motion of the gate.

Type E: An audio alarm.

Use and Application

The model BLSL3060 is intended for Class I, II, III and IV usage on a vehicular slide gate application.

a) Install the gate operator only when:

1) The operator is appropriate for the construction of the gate and the usage Class of the gate,

2) All openings of a horizontal slide gate are guarded or screened from the bottom of the gate to a minimum of 4 feet (1.22 m) above the ground to prevent a 2-1/4 inch (57.2 mm) diameter sphere from passing through the openings anywhere in the gate, and in that portion of the adjacent fence that the gate covers in the open position,

3) All exposed pinch points are eliminated or guarded, and

4) Guarding is supplied for exposed rollers.

b) The operator is intended for installation only on gates used for vehicles. Pedestrians must be supplied with a separate access opening. The pedestrian access opening shall be designed to promote pedestrian usage. Locate the gate such that persons will not come in contact with the vehicular gate during the entire path of travel of the vehicular gate.

c) The gate must be installed in a location so that enough clearance is supplied between the gate and adjacent structures when opening and closing to reduce the risk of entrapment. Swinging gates shall not open into public access areas.

d) The gate must be properly installed and work freely in both directions prior to the installation of the gate operator. Do not over-tighten the operator clutch or pressure relief valve to compensate for a damaged gate.

e) For gate operators utilizing Type D protection:

1) The gate operator controls must be placed so that the user has full view of the gate area when the gate is moving,

2 The placard equivalent to the following: “To reduce the risk of electric shock the operator power is to be provided from a weatherproof outlet in the case of attachment plug connection or weatherproof junction box in the case of permanent wiring according to the National Electrical Code, NFPA 70.” shall be placed adjacent to the controls,

3) An automatic closing device (such as a timer, loop sensor, or similar device) shall not be employed, and

4) No other activation device shall be connected.

Important Safety Instructions

WARNING – To reduce the risk of injury or death:

1. READ AND FOLLOW ALL INSTRUCTIONS.
2. Never let children operate or play with gate controls. Keep the remote control away from children.
3. Always keep people and objects away from the gate. NO ONE SHOULD CROSS THE PATH OF THE MOVING GATE.
4. Test the gate operator monthly. The gate MUST reverse on contact with a rigid object or stop when an object activates the non-contact sensors. After adjusting the force or the limit of travel, retest the gate operator. Failure to adjust and retest the gate operator properly can increase the risk of injury or death.
5. Use the emergency release only when the gate is not moving.
6. KEEP GATES PROPERLY MAINTAINED. Read the owner's manual. Have a qualified service person make repairs to gate hardware.
7. The entrance is for vehicles only. Pedestrians must use separate entrance.
8. SAVE THESE INSTRUCTIONS

SPECIFICATIONS

Maximum Gate Weight:	3000 lbs.
Maximum Gate Length:	60 feet
Opening Time:	12" per second
Power Requirements:	120 VAC Single Phase at 2 Amps or 220 VAC Single Phase at 1 Amp
Main Power:	Power Input: 100-240 VAC Select 115 /230 VAC Single Phase Built-in 24VDC battery backup (33AmpHr 12VDC x 2)
Operating Temperature:	-20°C (-4°F) to 70°C (158°F)
Operator Weight:	210 lbs.
Operator Dimensions:	

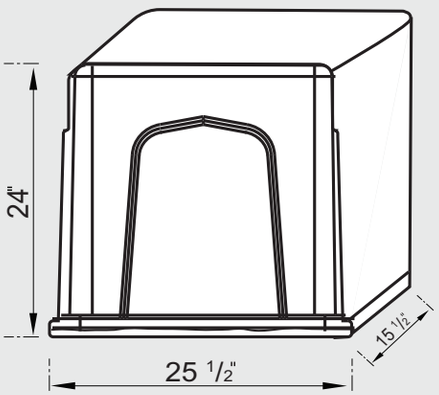

Maintenance Instructions

Maintenance instructions of BLSL3060 performed by a qualified gate operator technician Installation, all connections, programming, repair and modifications must be done by a qualified professional gate operator installer.

The following services need to be periodically performed:

- Check and adjust the gate operator for force, speed, and sensitivity.
- Make sure all power (AC/DC) connections are corrosion free.
- Check all batteries for proper voltage of the intended use. A fully charged battery must be 26 VDC minimum.
- Check the incoming line voltage and confirm it is within 10% of its rating (115 or 230 volts).
- Verify battery backup functionally by turning off the power source (115 VAC and 230 VAC). Don't forget to restore power after testing.
- Check the wheels, guide rollers, chain, and lubricate where needed with a heavy-duty, highperformance lubricant and avoid spillage.
- Inspect the track for any signs of cracking or separation.
- Test (use caution) all contact and non-contact sensors, all vehicle detectors, keypad, telephone entry system or other control devices applicable.
- Test the manual release feature on the operator.

Maintenance instructions of BLSL3060 performed by the end user/home owner

Installation, all connections, programming, repair and modifications must be done by a qualified professional gate operator installer. End users/home owners must call a qualified professional gate operator installer for programming changes, repairs and modifications.

Although all Platinum Access Systems' gate operators are virtually maintenance free to an end user/home owr minimal maintenance is recommended to ensure a smooth operation of this unit.

End users/home owners:

- Perform maintenance every six months, or when strenuous noise from wheels and/or guide rollers is detected. Lubricate them with heavy-duty, high-performance lubricant and avoid spillage.
- DO NOT take the cover off the operator and/or the electrical control box to perform maintenance.
- Make sure there are no cars in the path of the gate while performing maintenance.
- Make sure the person performing maintenance is the only person in control of all control devices in order to avoid possible involuntary activation of the gate operator.
- Keep spraying water hoses and sprinkler systems away from the gate, gate operator and the electrical control box at all times. Keep that general area as clean as humanly possible.
- Test (use caution) all non-contact sensors, all vehicle detectors, keypad, telephone entry system or other control devices applicable.

Intended Use

The operator is intended for installation on a vehicular slide gate only.

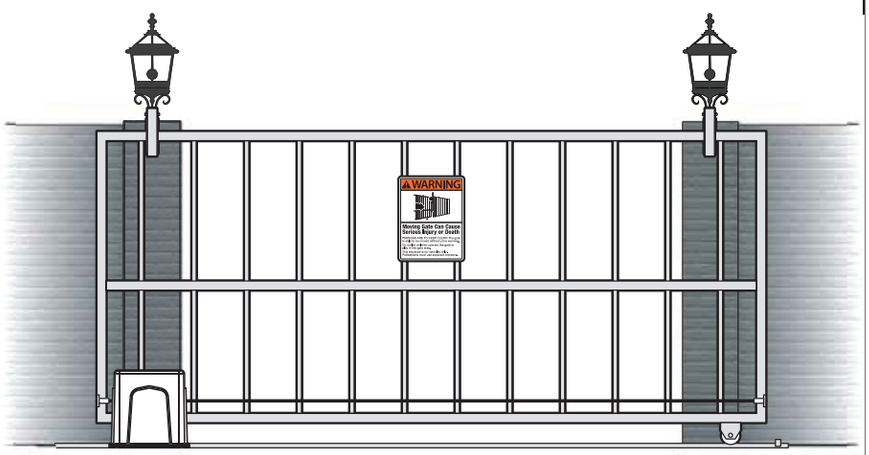

The operator IS NOT intended to be used for any pedestrian gate.

Types of Installations

FRONT INSTALLATION

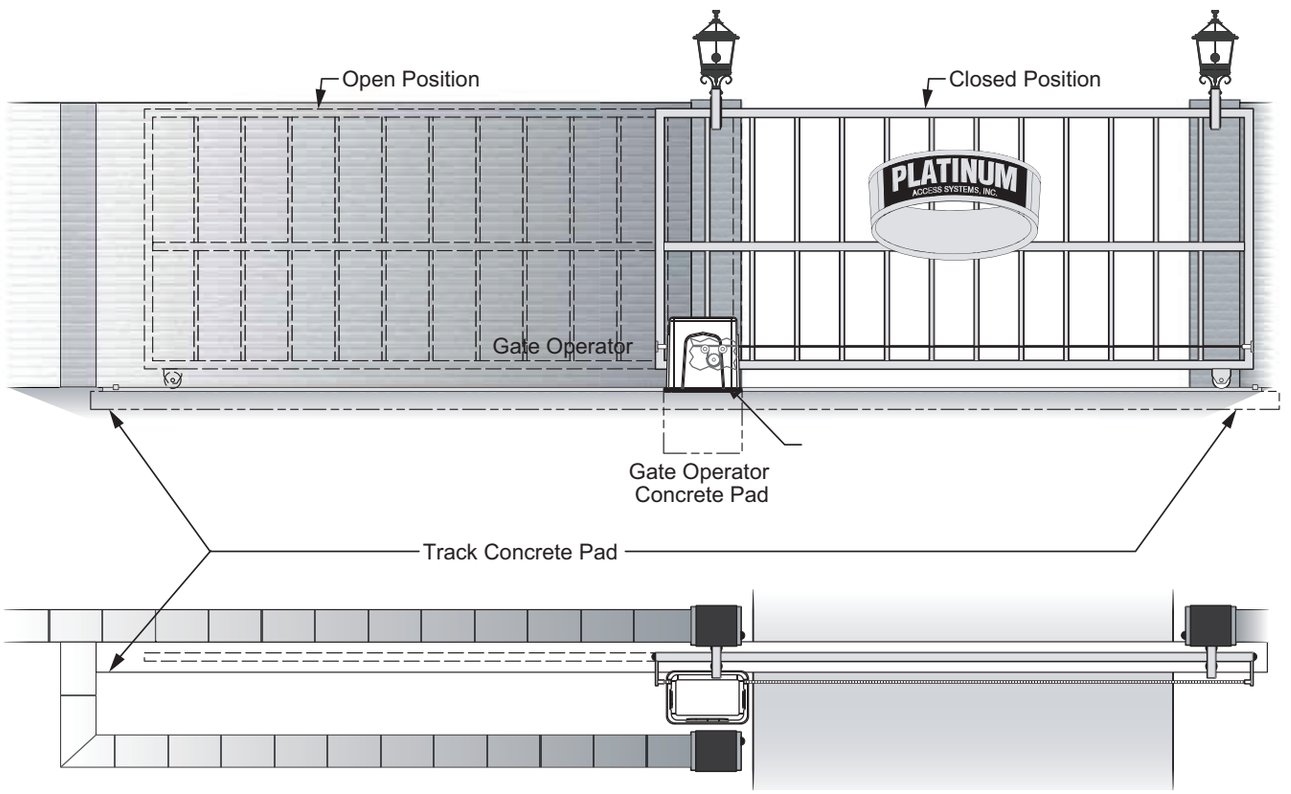

Types of Installations

REAR INSTALLATION

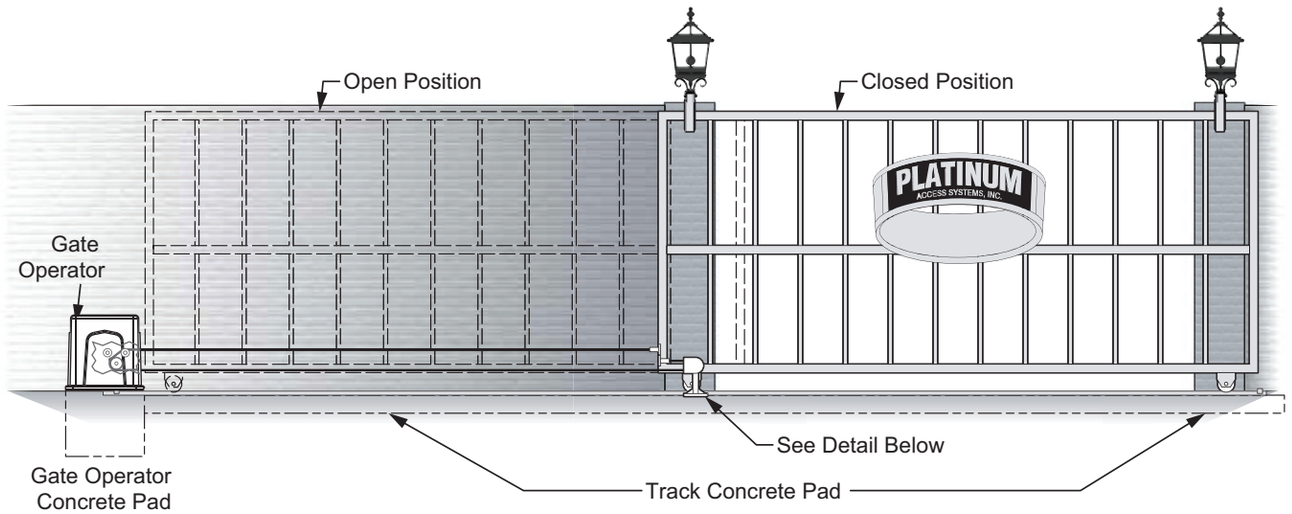

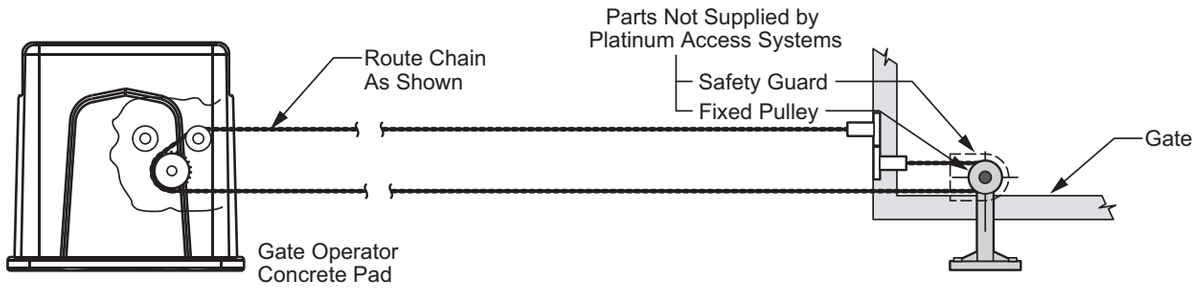

Mounting Instructions

CONCRETE PAD

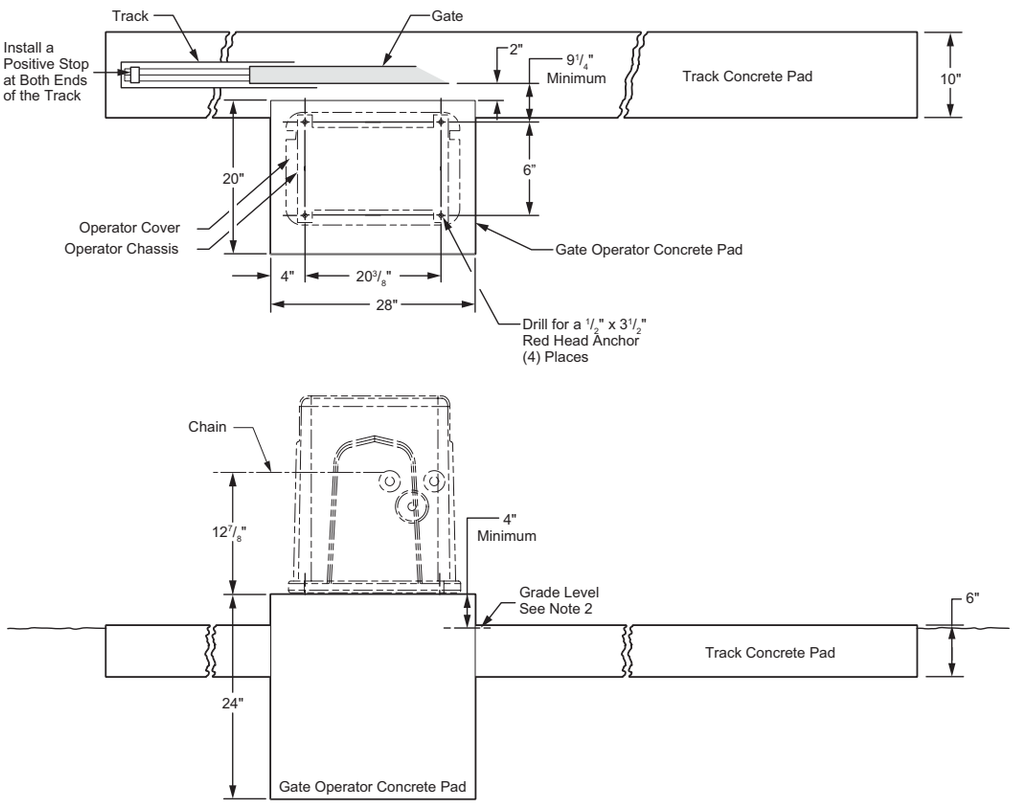

1. Follow the local building code to determine the requirement of the concrete pad.
2. We recommend the Pad measurements should be at least 28" long, 20" wide, and 24" deep to ensure the stable operation of the operator, and a minimum of 4" above level grade to avoid any flooding of the operator.
3. To support the weight of the gate, we recommend the path of the track should be at least 10" wide and 6" deep.

Mounting Instructions

NOTE:

Pre-installation procedure;

- Manually open and close the gate, ensuring there is sufficient space between adjacent walls and gate.
- While pushing the gate to the open and closed positions, confirm that the wheels turn freely on the track and there are no obstacles.
- Ensure that there is plenty of space for the guide rollers and that there are no obstacles throughout the movement of the gate.

STEP 1

Ensure the gate and operator are LEVEL and PARALLEL prior to anchoring the chassis to the concrete pad.

Minimum distance between the operator and gate is 3”.

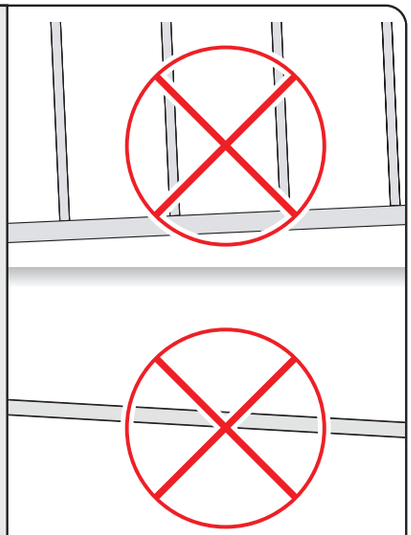

STEP 2

Secure the operator to the concrete pad using Red Head 1/2” x 3-1/2” Anchors.

Always follow the manufacturers instructions for proper installation. Refer to pg. 10 for hole center dimensions.

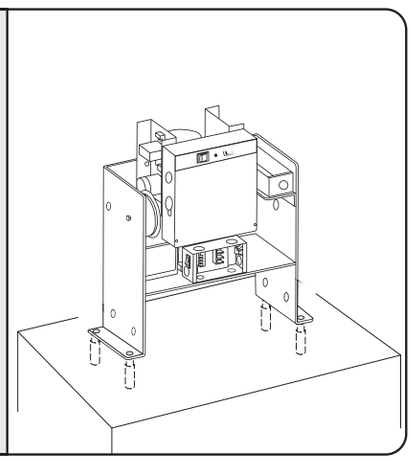

Mounting Instructions

STEP 3

Chain Installation:

Confirm the chain will be in a straight line with, and at the same height as, the chain leaving the gate operator rollers prior to welding the chain brackets provided.

Correct

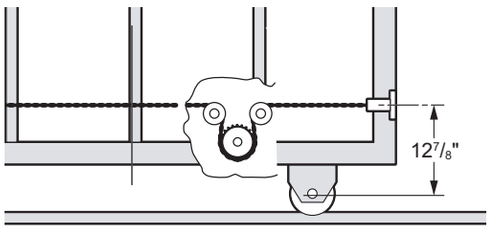

Correct

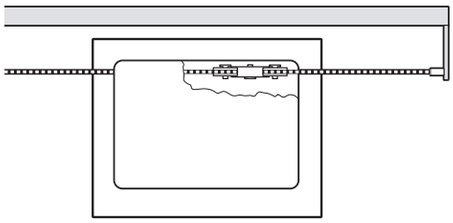

Incorrect

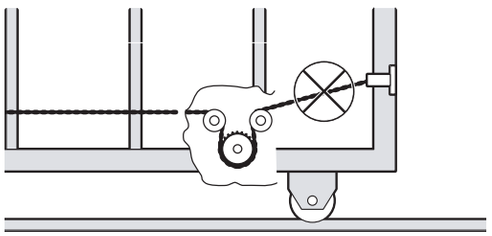

Incorrect

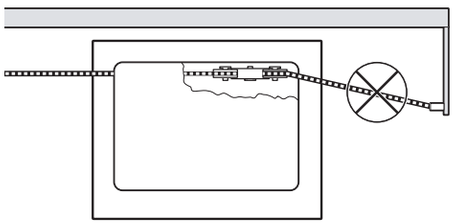

Manual Release

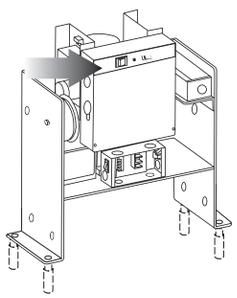

When manual operation is required:

Open the front plug, locate the Reset Switch and turn it to the “OFF” position.

Turn the switch to the “RESET” position to resume normal operation.

Installation: entrapment protection

Note: This type of installation DOES NOT reverse the gate all the way back to its limits when the sensors are obstructed. This installation is only to protect against entrapment and to comply with UL325.

Contact Sensor Installation:

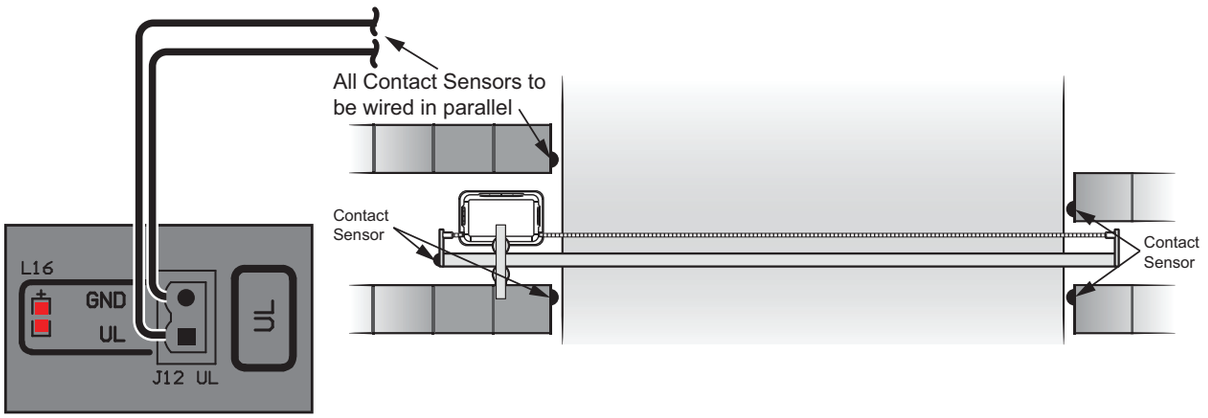

Only sensors compliant with UL 325 are recommended.

Non-Contact Sensors (Photoelectric Sensors) Installation:

One or more non-contact sensors shall be located where the risk of entrapment or obstruction exists, such as the perimeter reachable by a moving gate or barrier.

Install photoelectric sensors to protect against any entrapment or safety conditions encountered in your gate application.

We recommend the use of EMX IRB-325 photoeyes to comply with UL325.

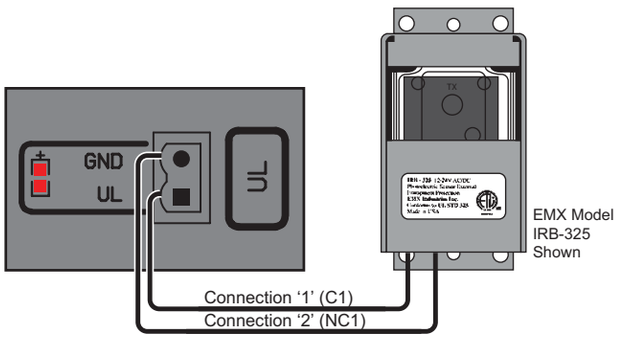

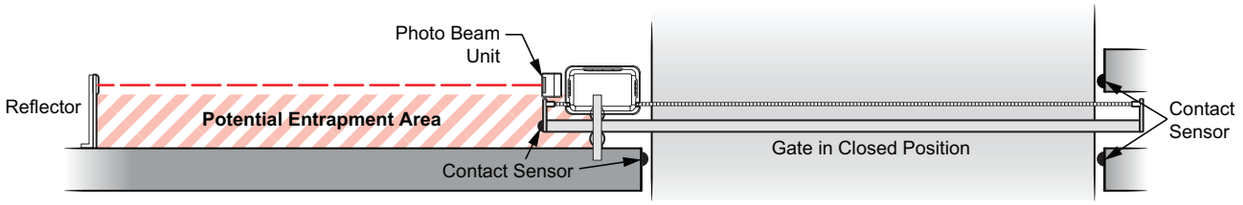

Consult the UL325 device installation manual for more detail information about the usage, installation and maintenance of this device.

Installation: Inductive Loops

WARNING – Consult the installation instructions from the loop detector manufacturer. The following statements are provided as a guide but different requirements may be required by the vehicular loop detector manufacturer.

Inductive Loops Installation:

Safety loops allows the gate to stay open when vehicles are obstructing the gate path.
If the gate is longer than the vehicles that pass through it a center loop is recommended and should be installed. A center loop prevents the gate from closing when a vehicle is between the safety loops. Safety loops are required when using a center loop. See Loop Wiring.

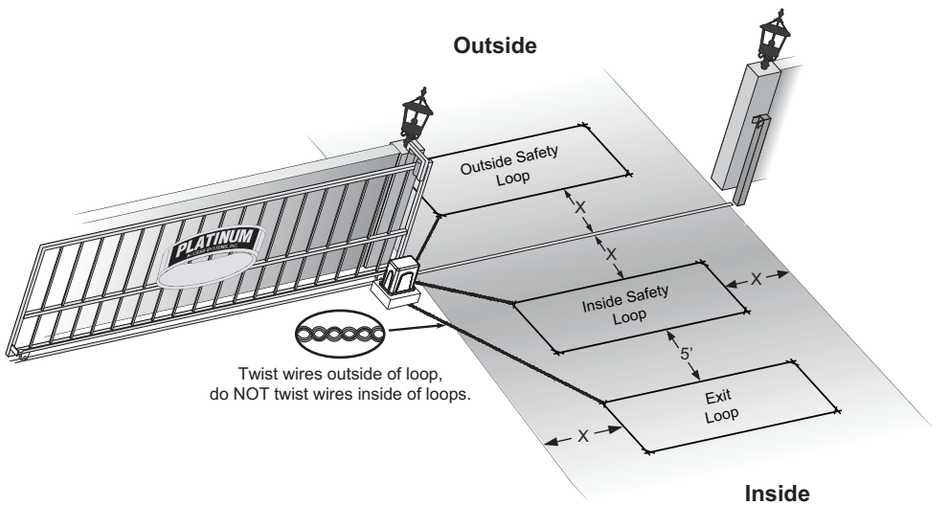

Check with local regulations and accepted best practice requirements for every installation.

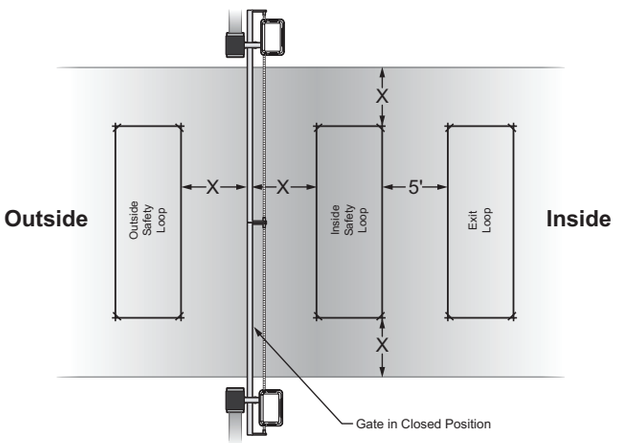

Installation: inductive loops

WARNING – This product is an accessory or part of a system. Always read and follow the manufacturer's instructions for the equipment before connecting this product. Comply with all applicable codes and safety regulations. Failure to do so may result in damage, injury or death.

New Slab Pour

Ty-wrap 1 1/4" PVC Pipe to the top of the rebar in the size and configuration of the loop (i.e. 4ft x 8ft). Then ty-wrap the loop to the top of the PVC frame. This stabilizes the loop during the pour and separates it from the rebar.

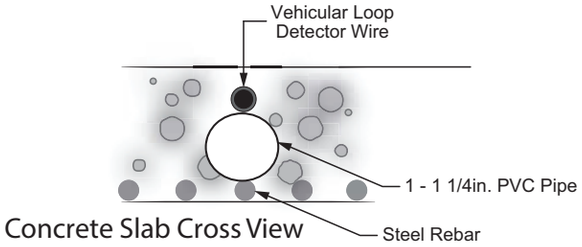

Concrete Slab Cross View

Saw Cut Existing Surface

Cut " deep into the existing surface, place a 45° cut at the corners to prevent sharp edges from damaging the loop wire. Notch out for the "T" connection where the lead wire connects to the loop. Remove all debris from the finished cut with compressed air. Place the loop into the saw cut. Place backer material into the saw cut over the loop wire and pack tightly. Place a high quality sealer over the saw cut to seal the surface.

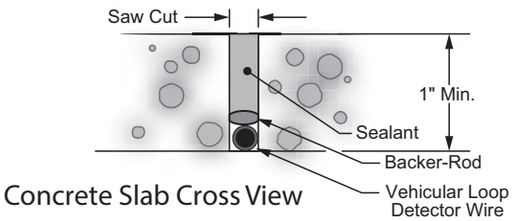

Concrete Slab Cross View

Resurface Asphalt

Saw cut the existing surface 3/4" deep and place a 45° cut at the corners to prevent sharp edges from damaging the loop wire. Remove all debris from the finished cut with compressed air. Place sand over the loop wire to the surface and pack tightly. Lay new asphalt.

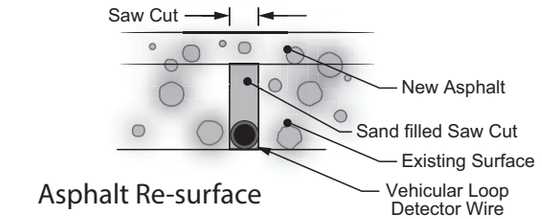

Asphalt Re-surface

General Installation Guidelines

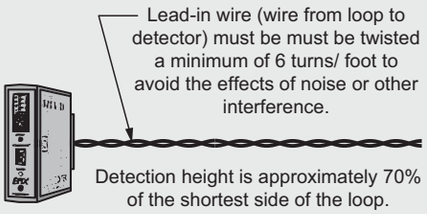

Recommended # of Turns

Perimeter in Feet	# of Turns
10	5
20	4
30-40	3
50-100	2

Installation: Alarm Reset Switch & Warning Placards

WARNING – To reduce the risk of severe injury or death to person, please follow these instructions:

ALARM RESET SWITCH INSTALLATION: (UL 325 standard requirement)

An alarm shall signal upon two sequential activations of an entrapment protection device, where the first activation is either a Type A or B2 device and the second activation is a Type A device. The alarm shall signal for a minimum of 5 min or until a renewed manual input from an integral control or a permanently mounted control (such as a Stop button) located in the line-of-sight of the gate has been entered. An audio alarm is not required for Classes III and IV.

To reset the alarm the Stop command can be given in two different ways.

1- The Built in Stop switch on the control board.

2- The External Stop button in the line-of-sight of the gate, away from moving parts of the gate and out of reach of children.

WARNING PLACARDS INSTALLATION:

All Warning Sings and Placards must be mounted where visible in the area of the gate.
A minimum of two (2) Warning Placards shall be mounted. (One on each side of the gate).

Installation: ElecTrical

WARNING – Verify the installation first to make sure everything is correct before connecting the power cable to the board. USE MIN. 14 AWG WIRE. FOLLOW ALL LOCAL ELECTRICAL CODES.

To help protect the equipment from lightning and power surges and to protect persons from shock hazard the Operator must be grounded. The earth ground rod must be located within 3 feet from the gate operator. Use the proper type earth ground rod for your local area. The ground wire must be a single, whole piece of wire. Never splice two wires for the ground wire. If you cut the ground wire too short, break it, or destroy its integrity, replace it with a single wire length. Prevent unnecessary turns or loops in ground wires.

The gate operator and the battery charger require a single phase AC line to operate.

1. Turn off the breaker for the circuit you are using.
2. Select the proper voltage on the power board.
3. Connect the incoming power wires to the proper terminals.
4. Turn on the breaker and check that AC ON and CHARGE LED are lit.

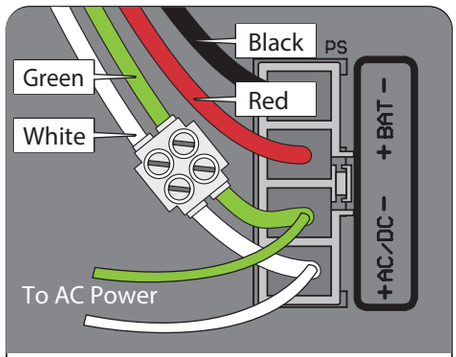

Power Harness

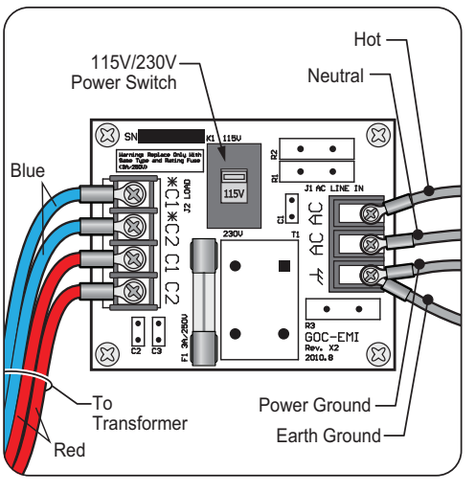

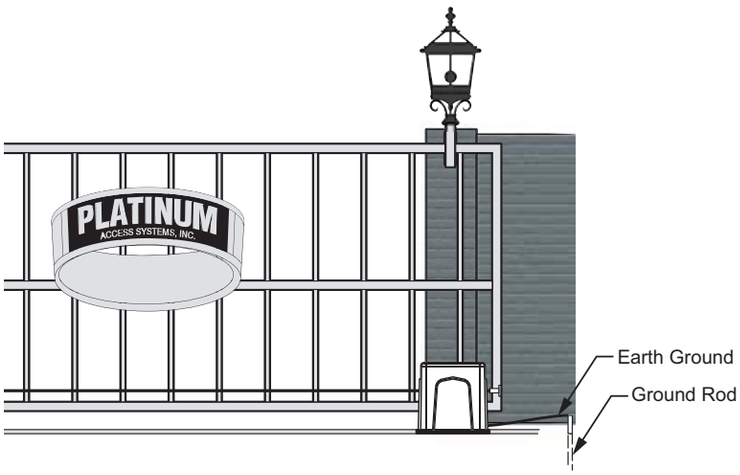

The power receptacle has been left unconnected till the installer decides what voltage to use.
Connect to 120VAC only

Installation: Electrical

CONNECTING POWER: (PRE-WIRED)

Connect the LIMIT harness to J14, and MOTOR CTL harness to J4.
On the OPEN DIR switch: Select “RIGHT” to open right.
Select “LEFT” to open left.

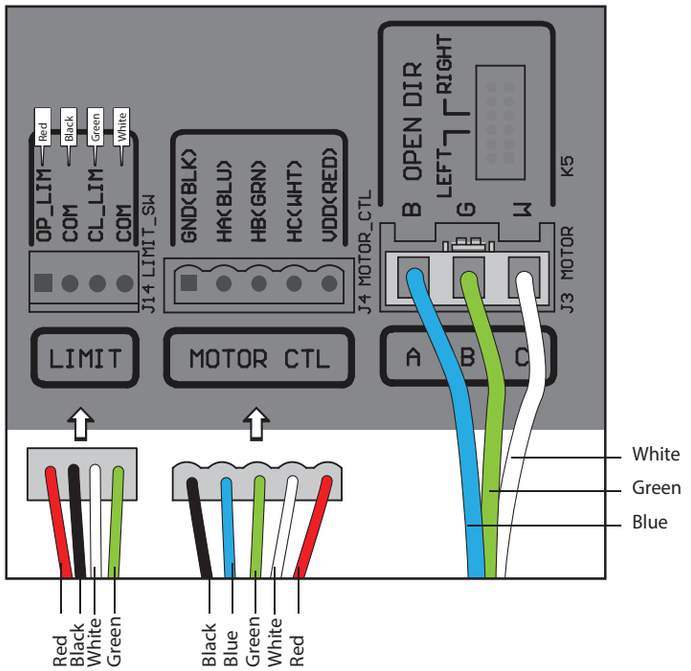

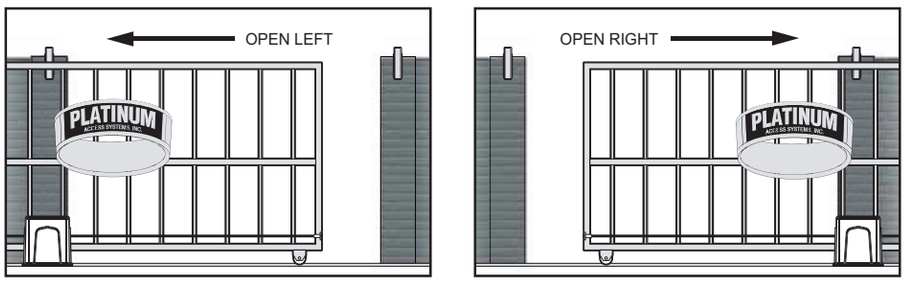

Installation: LIMIT SWITCH SET-UP

LIMIT SWITCH SET-UP:

STEP 4

A. Move the gate manually to the closed position.
B. Loosen and rotate the Right Limit Switch Cam until the Right Limit Switch “clicks”.

Gate Opens to Right	
Left Limit Switch	Open limit
Right Limit Switch	Close limit

Gate Opens to Left	
Left Limit Switch	Close limit
Right Limit Switch	Open limit

C. Move the gate manually to the open position.
D. Loosen and rotate the Left Limit Switch Cam until the Left Limit Switch “clicks”.
E. Run the unit 2 full cycles without interruption (from limit to limit) to execute a “Learn Cycle.”

Note: Open and close the gate without interruption every time you change the adjustment.

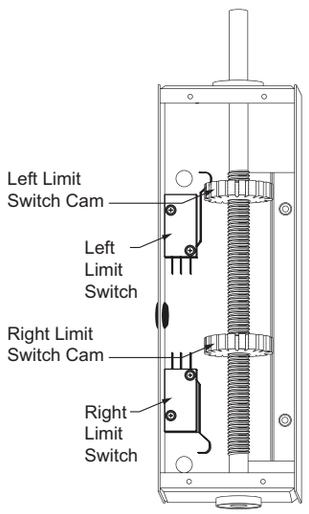

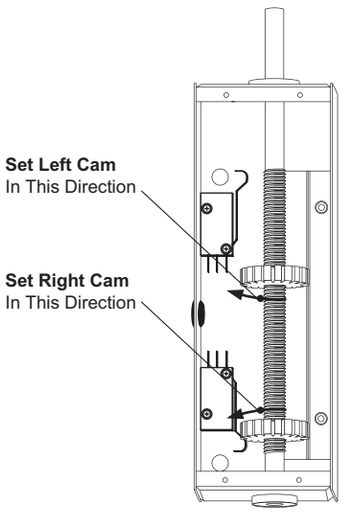

LIMIT SWITCH SET-UP (continued):

OPENING/CLOSING SETUP

1. Setup the limit switches manually at the desired open and close position.

2. Allow the gate operator to run a full open and close cycle (from limit to limit) without interruption.
Note: During the first full open and close cycle, the gate operator will run at low speed. During subsequent cycles, the gate operator will speed up at start and slow down prior to reaching its limits.

3. Verify that the gate opens and closes to the desired position.

Note: When slightly adjusting the open or close limit position(s), the operator will automatically adapt the changes. When relearning is needed, push and hold "RESET" button for 3 second, the machine will return to original state, and be ready for learning.

LIMIT SWITCH CONNECTIONS

The Limit Switches are pre-wired. Should the wires become disconnected, use this diagram to reconnect them.

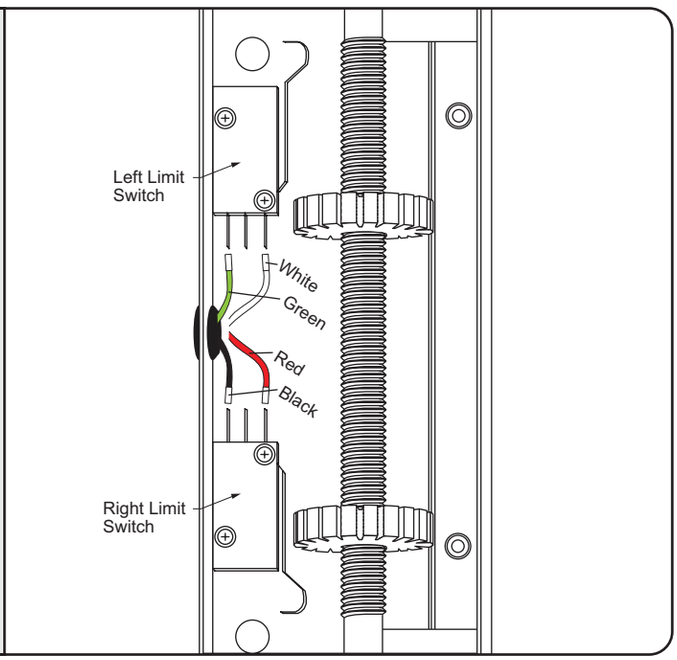

Installation: Primary/Secondary Connections

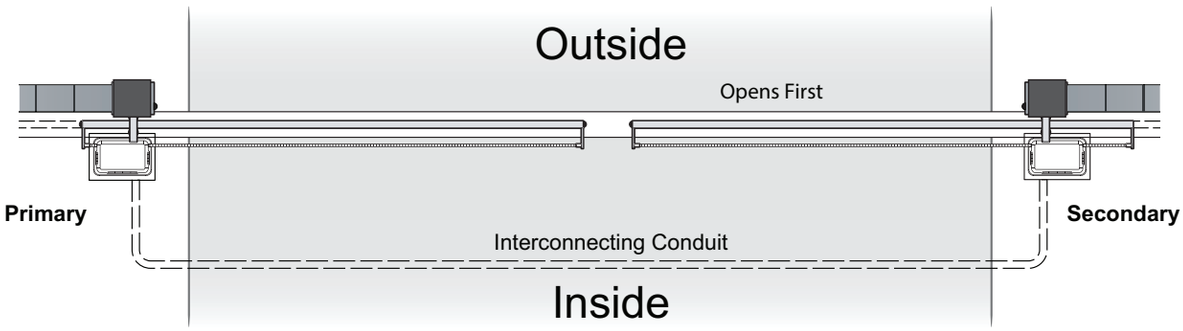

Caution – Do not run Primary/Secondary communication cable in the same conduit as the power supply (120-220V) cable.

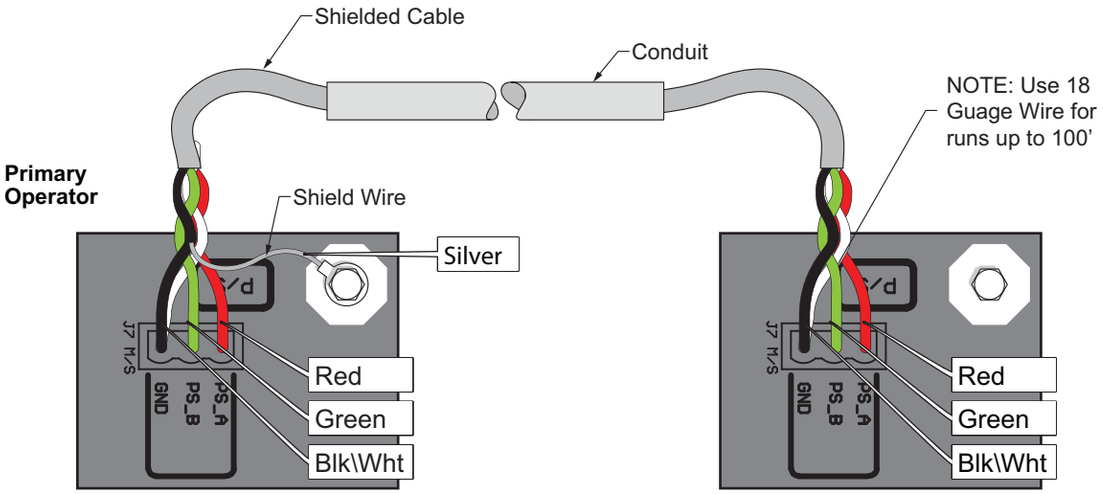

The control board provides a connector for Primary/Secondary connectivity. This connector will allow synchronized operation with a second gate operator.

Installation: Loop Rack

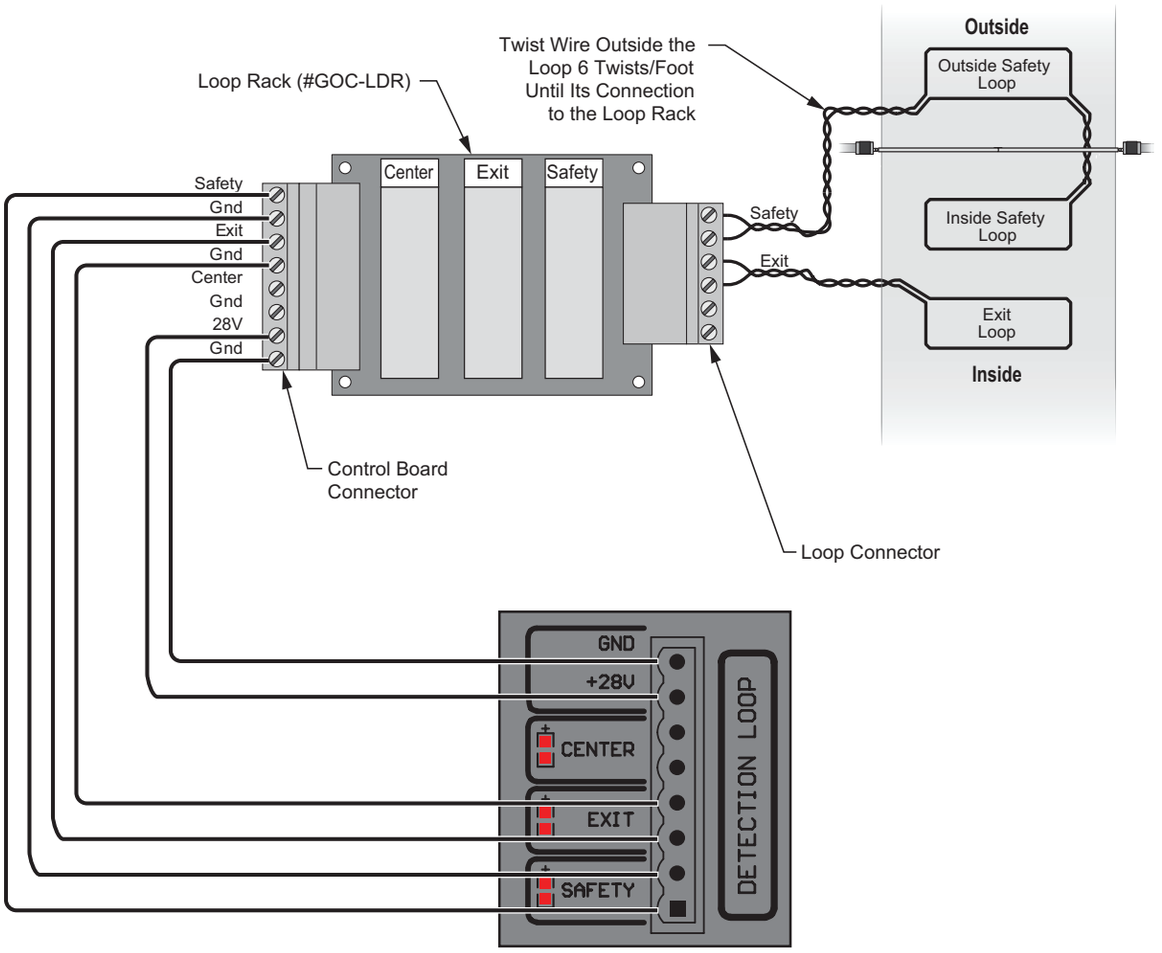

Installation: Accessory Connections

ACCESSORY CONNECTIONS:

To decrease the possibility of vehicle entrapment on the gate, vehicle loop detectors need to be installed. The edge sensor and the photo-electric beam can be used for secondary entrapment protection on every installation to prevent pedestrian or animal entrapment. These accessories must be UL325 compliant devices.

Safety Connections

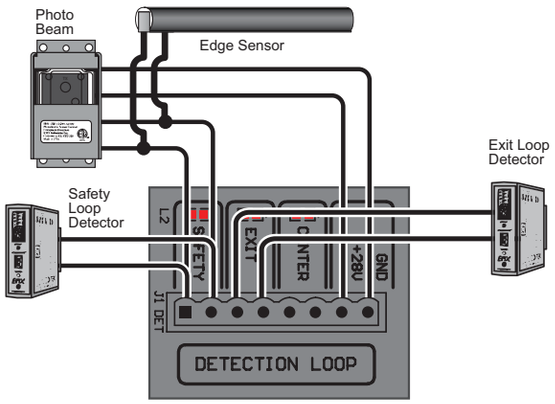

Open Commands

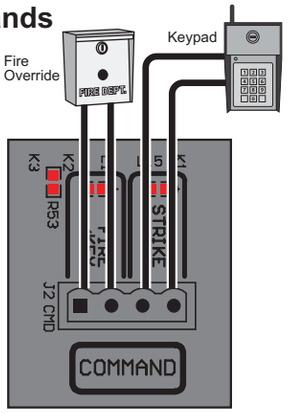

Reopen Photo Beam

Note: Installing the photo beam in this way, allows the gate to re-open all the way upon obstruction of the photo-beam.

The optional PBD connector provides a controlled power supply for Photo Beam. The power will be turned off when gate is in close position to save battery.

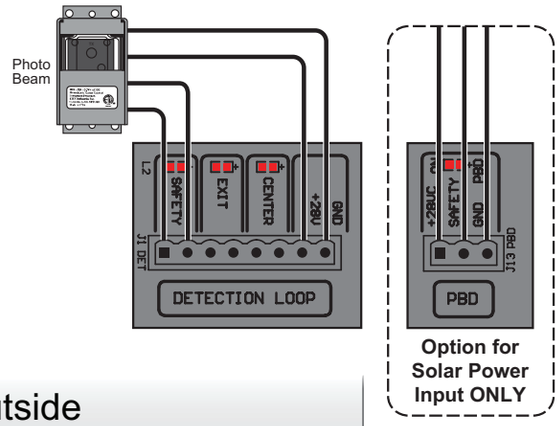

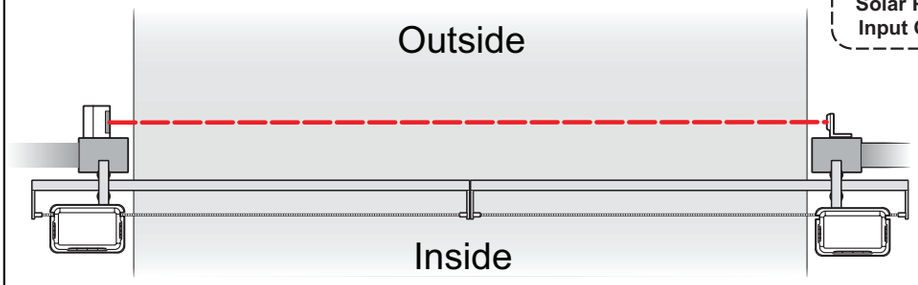

ACCESSORY CONNECTIONS (continued):

Radio Receiver

Need to verify the proper connections before connecting the Radio Receiver. The maximum voltage that the control board / battery can provide is about 28V for external accessories. If there is an electrical shot in the power to the accessories, the control board will protect itself by shutting down and will remain shut down until the short is fixed.

Two modes of operation that a radio receiver can control the gate:

Open-Close

By having the radio receiver connected as illustrated and with the Timer OFF:

Every command of the radio transmitter will control the gate as follow:

A. First command opens the gate
B. Second command CLOSE the gate if at open position
C. Third command OPEN the gate
D. Any subsequent commands will continue in the same order to control the gate.

This type of configuration is not recommended for a commercial installations.

Open Only

By having the radio receiver connected as illustrated and with the Timer ON:

Each command of the radio transmitter is ALWAYS AN OPEN COMMAND to the gate.

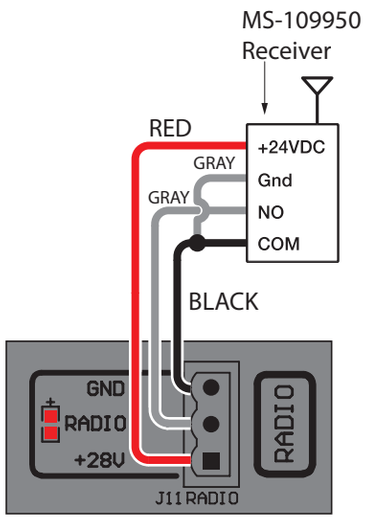

Linear MS-109950
Installation Diagram

ACCESSORY CONNECTIONS (continued):

Solenoid Connection

The solenoid power connection must be provided an external power source. This will prevent damage to the battery in the event of a line power failure.

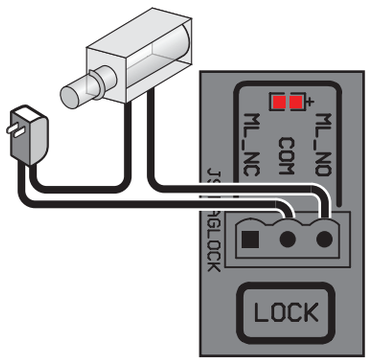

Guard Station

This will control the gate operator to Open, Stop, and Close the gate. The switches for Open and Close must be normally open type. The switch for Stop must be normally close type. They all can be using the same common ground. The control switch box should be within sight of the gate, out of reach of children, and away from moving parts of the gate.

If no guard station or STOP switch is installed, a jumper must be inserted between “STOP(NC)” and “GND” pins.

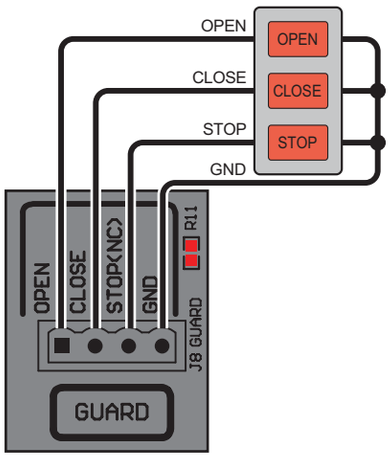

ACCESSORY CONNECTIONS (continued):

Locks

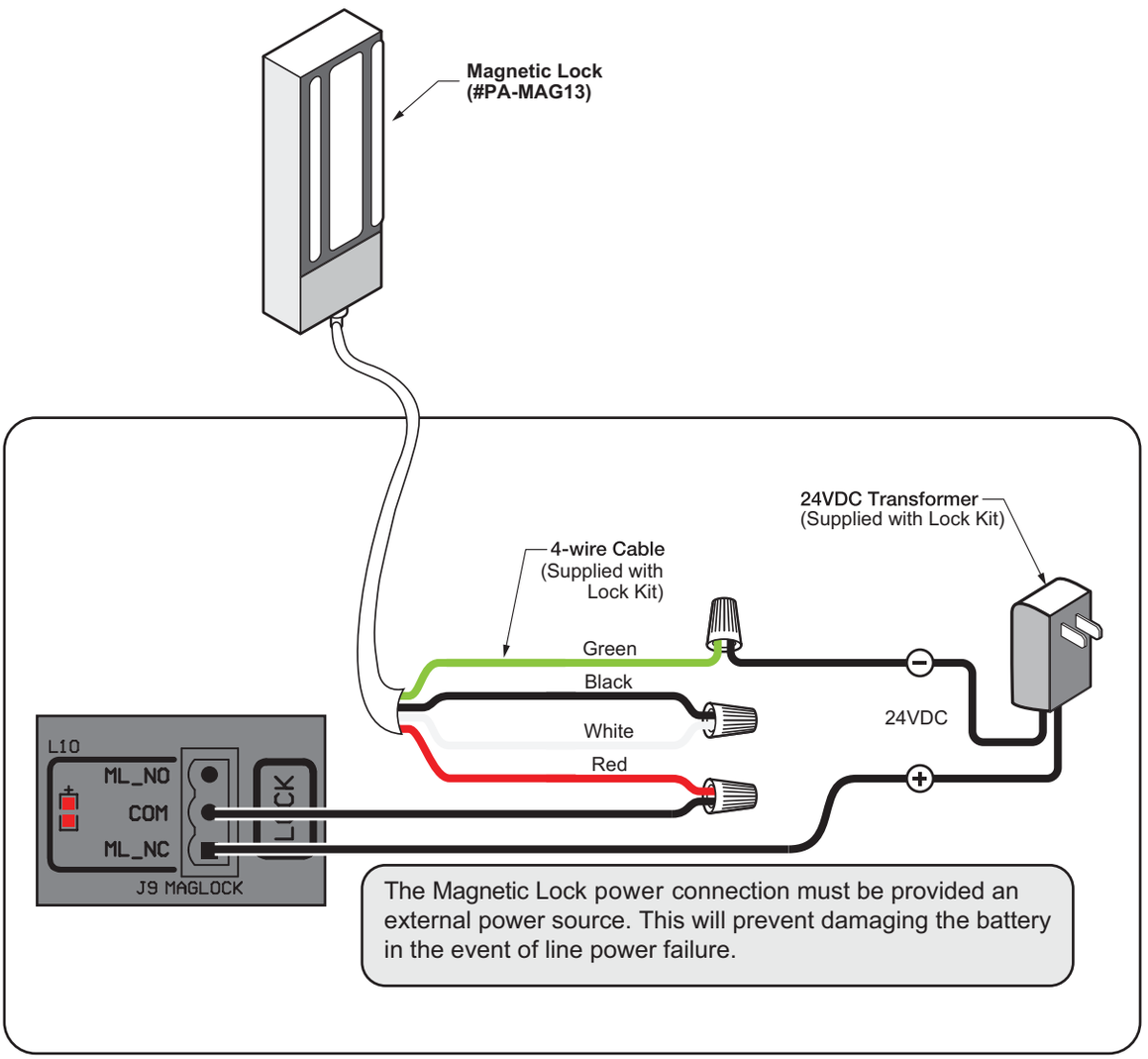

OPTIONAL ACCESSORY- part # (PA-MAG13).

Installation: Selectable Features

PRIMARY/SECONDARY OPERATOR SELECT:

Primary/Secondary

To set the operator to Secondary: Select the DIP switch to SECONDARY position. Recycle power to make the new setting effective.

To set the operator to Primary: Select the DIP switch to PRIMARY position. Recycle power to make the new setting effective.

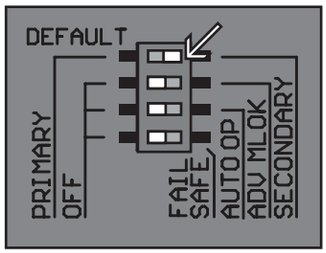

ADVANCING LOCK SELECT:

ADV MLOK

To set the maglock to be engaged before the gate reaches the close or open position: Select the DIP switch to ADV MLOK position.

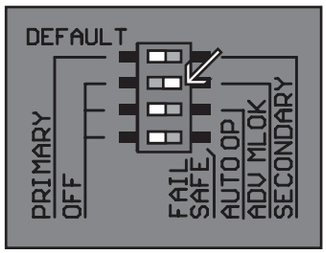

OPEN ON POWER FAIL:

The Auto-Open feature in Platinum Access Systems Gate Operators enables the following functionality in the event of power failure:

a. Open the gate in case of power failure (120 or 220 VAC).
b. Keep the gate at the open position as long as the there is no power.
c. Resume to normal operation when the power has been restored.

All accessories and safety devices are functional. The only function disabled is the close command.

Auto-Open

To enable the Auto-Open feature: Select the DIP switch to AUTO OP position.

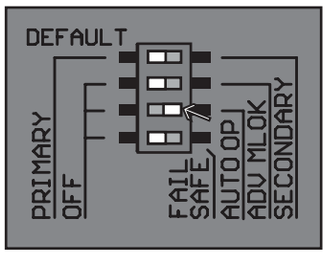

Installation: Selectable Features

CLOSE TIMER:

Close Timer

The Close Timer will close the gate a set time after the vehicle clears the gate area. This is adjustable from 3 to 60 seconds.

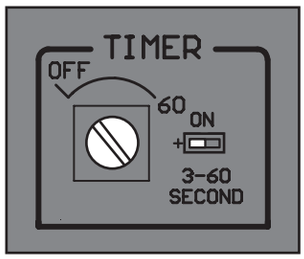

LEAF DELAY:

Leaf Delay

An Overlap Delay has been provided for biparting gates that have an emblem or maglock for example. It will provide up to a 3 second delay on primary or secondary operator.

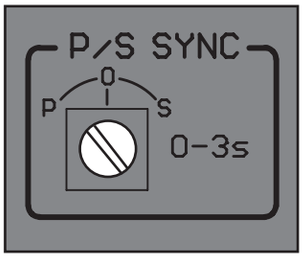

INSTANT REVERSING SENSOR:

Instant Reversing Sensor

The Obstruction Sensor needs to be adjusted to compensate for the installation and gate weight. The overload adjustment is provided to set the gate sensitivity.

a) If the gate reverses by itself or stops in midcycle, it is too sensitive.
b) If the gate hits an object and does not reverse or stop, it is not sensitive enough.
c) Clockwise increases sensitivity, counter-clockwise decreases sensitivity.

Test and adjust for proper reversing pressure

(Note: When unit alarms, push "STOP" or "RESET" button will clear the alarm)

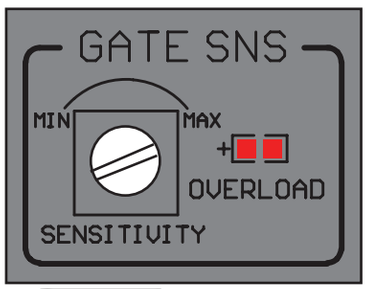

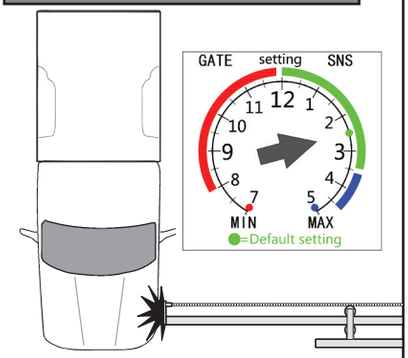

FAIL SAFE/SECURE:

Fail Safe/Secure

On = Fail Safe
Off = Fail Secure

Fail/Safety (Input)	Battery Detection	AC Detection	Output
ON	Normal	Normal	Secure
ON	Normal	OFF	Fail Safe
ON	Low/OFF	Normal	Fail Safe
ON	Low/OFF	OFF	Fail Safe
OFF	Normal	Normal	Secure
OFF	Normal	OFF	Fail Secure
OFF	Low/OFF	Normal	Fail Secure
OFF	Low	OFF	Fail Secure

Note: When the output is "Fail Safe", there is less resistance to push the gate open manually.

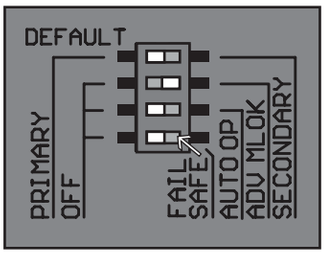

SOLAR INSTALLATION:

For solar installation assistance please call technical support at 909-259-6001

Parts Diagram

1. Chassis
2. Electrical Enclosure
3. Enclosure Plastic Cover
4. 24V 1/2 HP DC Brushless Motor
5. 25' #40 Chain Kit, Nickel Plated
6. Limit Switch Gear Box
7. Loop Rack
8. Limit Switch Bracket
9. Limit Switch Holder
10. 41B25 Sprocket
11. Idler Pulley (2)
12. Breaker Switch
13. Control Board
14. Toroid Transformer
15. Battery 24V (33 ampHr 12V DC x 2)
16. 120V Receptacle
17. Alarm
18. Limit Switch Harness
19. Power Harness
20. Operator Cover
21. Warning Placard
22. Battery Holder (2)
23. EMI Board
24. Control Box Bracket (2)
25. Worm Gear

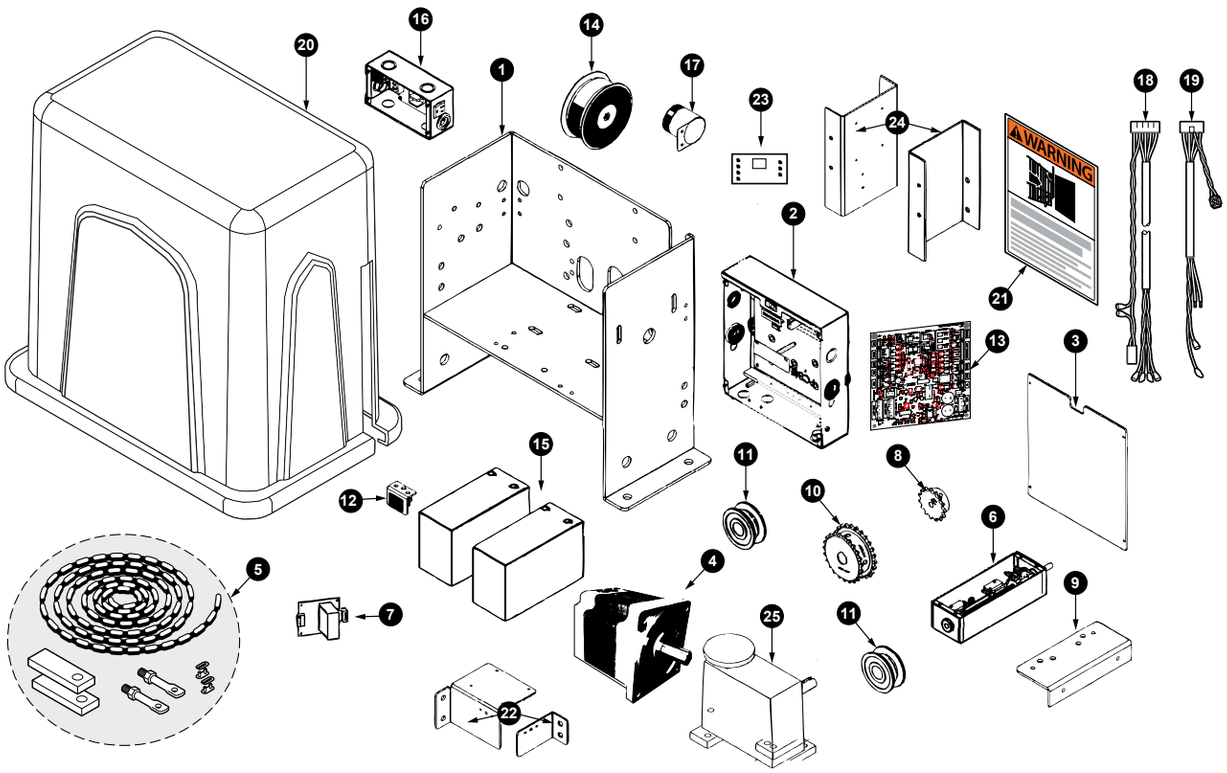

WARNING – For Installation By Qualified Personnel Only.

Gate Operator Trouble Shooting Procedure

1. Motor Does Not Run

a. AC/SOL LED is OFF:

-- Check battery breaker switch to make sure it is ON.
-- Check the motor breaker to make sure it is turned to ON position.
-- Make sure the AC Switch is ON and if necessary use a multi meter to check the input voltage to make sure it is 115VAC/220VAC.

b. AC/SOL LED is ON:

-- Check the motor breaker to make sure it is turned to ON position.
-- Check the motor wire connection to make sure every wire is firmly connected inside the terminal connector.
-- Check limit switch wires to make sure the close limit switch wire is connected to Common/GND, and the other wire is connect to the normal close position.
-- Disconnect all the external accessories first. Then check it to see if the motor can run. Some time the Photo beam sensor, edge sensor, loop detector, or other safety sensor prevents the motor from running.
-- Turn OFF the AC switch, Turn OFF the battery breaker. Wait for 30 seconds. Then turn the bat tery breaker and AC switch ON. Then reset the operator(s). This is a hard reset.
-- If you use the Multi Code 1090 receiver, please make sure the connection is correct. Connect from the receiver common pin to operator main board +28Vpin, and connect the receiver 24V pin to operator main board GND pin. If your connection is wrong, it can freeze the operator. Next turn the AC switch and battery breaker switch OFF. Wait for 30 seconds. Then turn these two switches back ON. Then reset the operator.

c. Power Failure:

-- Check battery connection, and check each battery voltage (12VDC) to make sure the battery is still at good condition.

d. Overload Sensor and Alarm are ON:

-- Press STOP button once to silence the alarm. Check the gate path to make sure everything is clear of obstructions. Double check to GATE SNS is set correctly. Normal SNS setting is at 2 O'clock. If needed, set sensor to 11 O'clock, 9 O'clock.

2. Problems While in Motion

a. Stops then Reverse:

-- Please check the gate path to make sure the path is clear with obstructions.
-- Double check the GATE SNS is set correctly. Normal setting is at 2 O'clock. If need, set sensor to 11 O'clock, 9 O'clock.
-- Check the gate hinge, or wheels, or other hardware to make sure everything is working nor mally.
-- Reset the gate operator to learn again.

b. Travel over the Limit Switch:

-- Check the limit switch to make sure it is good.
-- Check the limit switch wire to make sure the connection is correct.

Gate Operator Trouble Shooting Procedure

c. Does Not Close Automatically:
-- Check TIMER pot to make sure the setting is correct, or not. Normally set to 12 O'clock.
-- Check other external safe devices like Loop Detector, Photo Beam sensor, Edge Sensor, Radio to make sure none of them are activated.

3. Primary / Secondary Gate Configuration

a. Gates Open and/or Closes in Opposite Direction (Swing Gate).
-- Switch the OPEN DIR LEFT/RIGHT switch to the other direction.

b. Gates Do Not Close at the Same Time (Swing Gate).
-- Check the P/S SYNC pot to make sure it set to 12 O'clock. Then press reset button to reset the operators.

c. Gates Do Not Close in Preset Order (Swing Gates).
-- Check P/S SYNC pot to make sure the setting is correct. If it is correct, press rest button to reset the operators.
-- Check DIR switch to make sure one operator is set to secondary.

d. Sometime One Gate is Much Slower than the Other Gate.
-- Please make sure that every external device only connects to the Primary gate operator. Nothing should connect to Secondary gate operator. If any input device is connected to the Secondary unit, please change it to connect to the primary unit. Then press Reset to rest the operators.

e. Gates Hit Each Other (Master/Slave Slide Gates).
-- One gate over traveled. Make sure the limit nut has set correctly.
-- Please make sure the end user never use pad lock to lock the gates together. Only maglock can be used to lock the gates. Please correct this problem then reset the operators.

4. Others

a. Gate does not open at times and Alarm is ON (Swing Gate).
-- Please make sure the arm position in set up correctly. Make sure the arm does not put a lot of pressure on the output shaft when the gate starts to open.

b. Gate(s) Do not Open or Close and Alarm is ON.
-- Please make sure the There is a 4-pin terminal plug into the J8 GUARD connector with a short wire that short GND & ST

c. Operator Makes Beeping Sound.
-- Check battery. Battery voltage is low. Please make sure the battery breaker is ON, and the battery wire connection is good, and the charge led light is ON on the main board.
-- If these steps are OK and the unit is still making the beep sound, then it is time to replace the batteries. Please replace both batteries at the same time.

PLATINUM ACCESS SYSTEMS™
1725 E. Grevillea Court, Ontario, CA 91761
Phone: (855) 466-8686 I Fax: (909) 923-7890

www.PlatinumASI.com

© 2013 Platinum Access Systems, Inc. All Rights Reserved.